EXPLORER™

Semi-Micro Balances

Built for Precision, Powered by Innovation

The new Explorer (EXR series) offers an intuitive interface, outstanding weighing performance, and an environmentally friendly design. The new generation Explorer establishes a groundbreaking standard for laboratory operations.

Unique Features:

- **High Performance Weighing**

  Achieve consistent results with built-in automatic calibration, touchless sensors and a ventilated weighing pan. Get reliable data with the digital high-speed load cell.

- **Refined User Experience**

  An intuitive 7-inch glass touchscreen, digital leveling, and simplified data management is easy to use. With an effortless installation and chemical-protective design it ensures efficiency and comfort.

- **Effective Communication Options**

  Supports HID connection to PC or keyboard without drivers, and provides 2-way communication with RS232, USB, Ethernet, Bluetooth, and WiFi for seamless data transfer.

EXPLORER™ *Semi-Micro Balances*

Specifications

Model	EXR125D EXR125DM	EXR125 EXR125M	EXR225D EXR225DM	EXR225 EXR225M
Capacity	82 g / 120 g	120 g	120 g / 220 g	220 g
Readability d, Fine Range	0.01 mg	0.01 mg	0.01 mg	0.01 mg
Readability d, Full Range	0.1 mg	0.01 mg	0.1 mg	0.01 mg
Repeatability (sd.), ≤5% of Full Load Typical	0.01 mg	0.01 mg	0.01 mg	0.01 mg
Repeatability (sd.), 5% of Full Load to Fine Range Max	0.02 mg	0.02 mg	0.02 mg	0.02 mg
Repeatability (sd.), Fine Range Max to Full Range	0.1 mg	0.02 mg	0.1 mg	0.1 mg
Linearity Deviation Typical	0.06 mg	0.06 mg	0.06 mg	0.06 mg
Linearity Deviation	0.2 mg	0.1 mg	0.2 mg	0.1 mg
Verification Interval, e (EXP…M.. models only)	1 mg	1 mg	1 mg	1 mg
Approval Class (EXP…M.. models only)	Class I	Class I	Class I	Class I
Span Calibration Points	25g, 50g, 75g, 100g		50g, 100g, 150g, 200g	
Weighing Units	g, mg, ct, N, oz, ozt, Grain, dwt, mo, msg, tcl, tola, baht, Custom 1, Custom 2			
Weighing Units (EXR…M.. model only)	g, mg, ct			
Applications	Basic Weighing, Parts Counting, Check Counting, Percent Weighing, Check Weighing, Dynamic Weighing, Totalization, Formulation, Differential, Density Determination, Peak Hold			
Stabilization Time (typical)	0.1 mg: ≤2 seconds, 0.01 mg: ≤ 5 seconds			
Sensitivity Temperature Drift (ppm/°C)	0.8			
Min-Weight (typical) (K=2, U=1%)	2 mg			
Min-Weight (typical) (USP, K=2, U=0.10%)	20 mg			
Min-Weight (optimal) (USP, K=2, U=0.10%, SRP≤0.41d)	8.2 mg			
Terminal Display	7-inch TFT 16.7M Color Touch Screen with Glass Overlay			
Display Resolution	800 x 480 Pixels			
Communication	USB Host (Type A) x 2, USB Device (Type C) x 1 Ethernet (RJ45) x 1, RS232 x 1; Optional Wi-Fi, Bluetooth Dongle			
Leveling System	2 Leveling Feet with Digital Leveling Bubble			
Power Supply	AC Adapter Input: 100-240 VAC 0.5A 50-60 Hz AC Adapter Output: 12 VDC 1.5A			
Weighing Pan Size	Aero Pan 80mm x 80mm			
Touchless Sensor	2 Touchless Sensors on the terminal			
Draftshield with anti-static coating	Standard			
Terminal Status Lights	Standard, 7-color Selectable			
Assembled Dimensions (W x D x H)	230mm x 393mm x 370mm			
Shipping Dimensions (W x D x H)	415mm x 630mm x 561mm			
Net Weight	7.4 kg			
Shipping Weight	10.2 kg			

Outline Dimensions

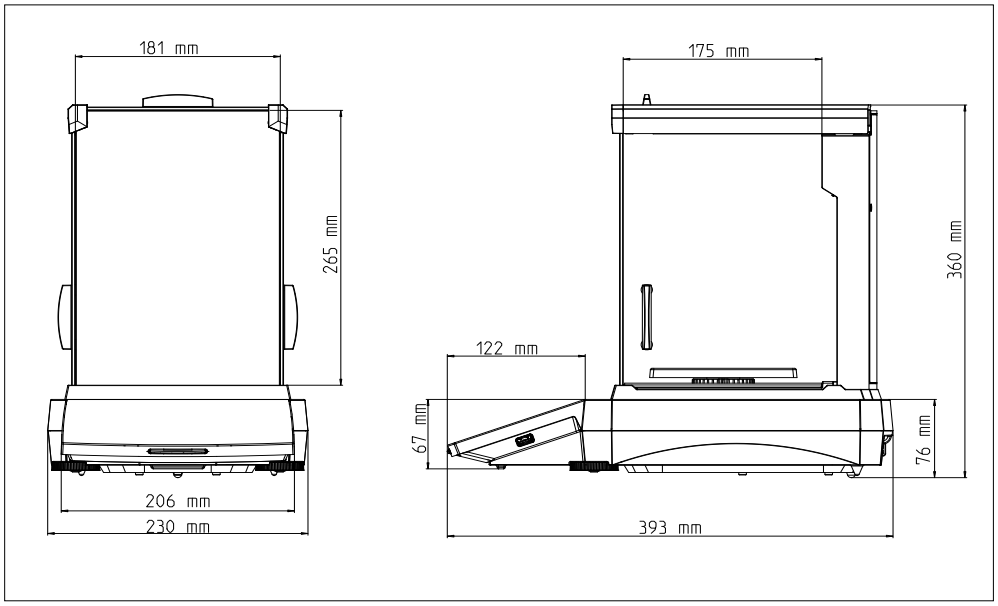

Approvals

- **Metrology:** OIML R76, EN 45501
- **Product Safety:** IEC/EN 61010-1; CAN/CSA C22.2 61010-1; UL 61010-1
- **Electromagnetic Compatibility:** IEC/EN 61326-1 Class B, Basic Environments; FCC Part 15 Class A; Canada ICES-003 Class A

EXPLORER™ *Semi-Micro Balances*

Accessories

	Item No.	30944359
	Accessory Name	Bluetooth Printer, Impact, SF40A/BT

	Item No.	30064202
	Accessory Name	Printer, Impact, SF40A

	Item No.	31059239
	Accessory Name	BT dongle and Wi-Fi dongle LM842

	Item No.	30095929
	Accessory Name	Static Ionizer, ION-100A

	Item No.	31059237
	Accessory Name	Weighing Kit

	Item No.	80253384
	Accessory Name	Density Kit, Solids

	Item No.	83034024
	Accessory Name	Sinker, Glass, Liquid, Density Kit

	Item No.	12120799
	Accessory Name	SF40A Paper roll (57,5mm 2pcs)

	Item No.	30529322
	Accessory Name	SF40A Ink Ribbon Cassette

80777120_B 20250925 © Copyright OHAUS Corporation

OHAUS Europe GmbH
e-mail: ssc@ohaus.com
Tel: 0041 22 567 53 19
e-mail: tsc@ohaus.com
Tel: 0041 22 567 53 20
www.ohaus.com

The management system governing the manufacture of this product is ISO 9001:2015 certified.

OHAUS®